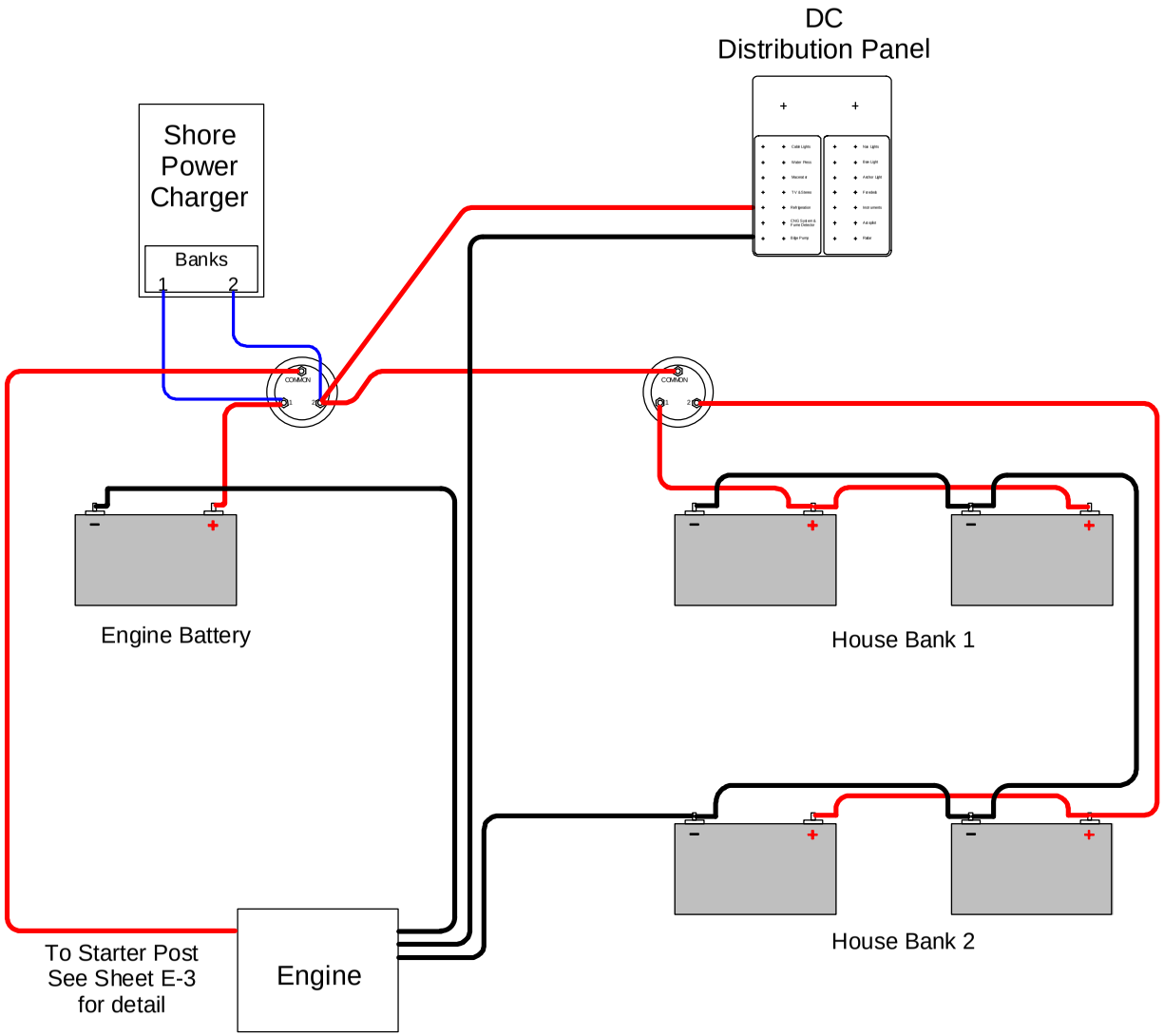

REVISIONS

NEIL DUTTON
ELECTRICAL CONTRACTING
C10 License #383116
949-370-7563

PROJECT
S/V Kalina
Electrical System

DATE
02/12/08

DRAWN BY
Neil

SCALE
None

LICENSED CONTRACTOR
DUTTON
ELECTRIC
C - 10
383116
EXP. 10/31/11
ELECTRICAL
STATE OF CALIFORNIA

SHEET TITLE
Battery Wiring

SHEET #
E - 1